New

NJM2592

470MHz Input Mixer & 455kHz FM IF Demodulator IC

■ GENERAL DESCRIPTION

The NJM2592 is a low-voltage, low-current FM IF demodulator IC with 455kHz(standard) IF frequency. It includes an oscillator, mixer, limiting amplifier, quadrature detector,active filter, and FSK comparator.

The NJM2592 also has a RSSI circuit and RSSI comparator for carrier sense.

■ PACKAGE OUTLINE

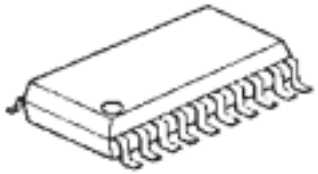

NJM2592V

■ FEATURES

- Low Operating Voltage 1.8V to 9V
- Low Operating Current 2.2mA at V^{+}=2V
- Operating Frequency Up to 470MHz (reference value)
- Mixer Input Impedance 50 ohm
- IF Input Frequency 455kHz (standard)
- Ceramic Discriminator or LC Resonant Circuit
- FSK Comparator with Open-collector Output
- Quick Charge/Discharge Circuit for FSK Reference Voltage.
- Bipolar Technology
- Package Outline SSOP20

■ BLOCK DIAGRAM

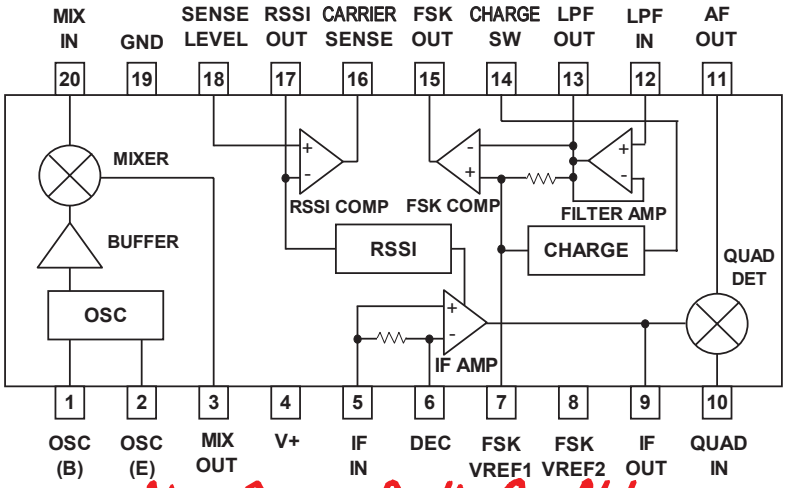

New Japan Radio Co.,Ltd.

May 10,2004 NJR Corporation ver1